REVISIONS

CHG.	DATE	DWN.	CH'KD.	APP'D.	REV'D.	DESCRIPTION
A	11/18/99	AHH	RC	WA		1) ADDED -61, -71, -81 ASS'Y, SH. 2 N/A FOR 107050-5012 & 5013 AND
						G/N. 2) 5 WAS 4. 3) 22 WAS 20. 4) 10 WAS 4.

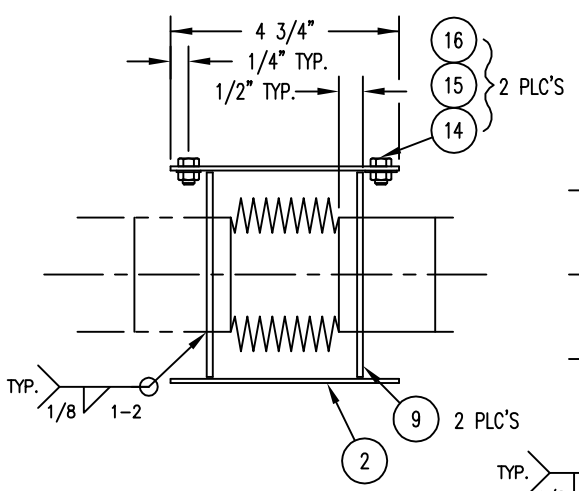

107050-5034-1

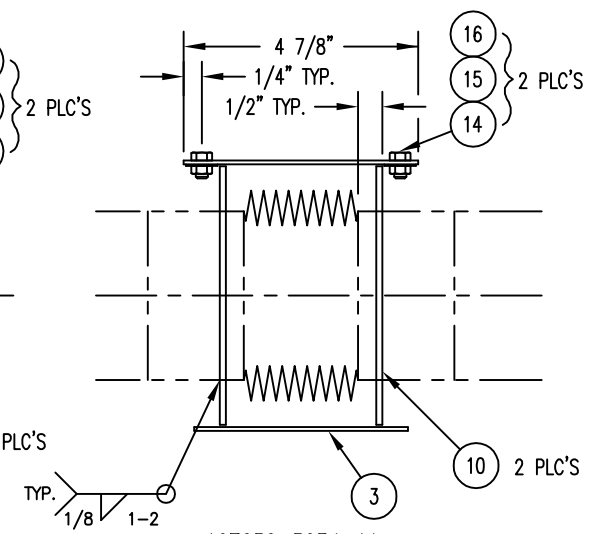

107050-5034-11

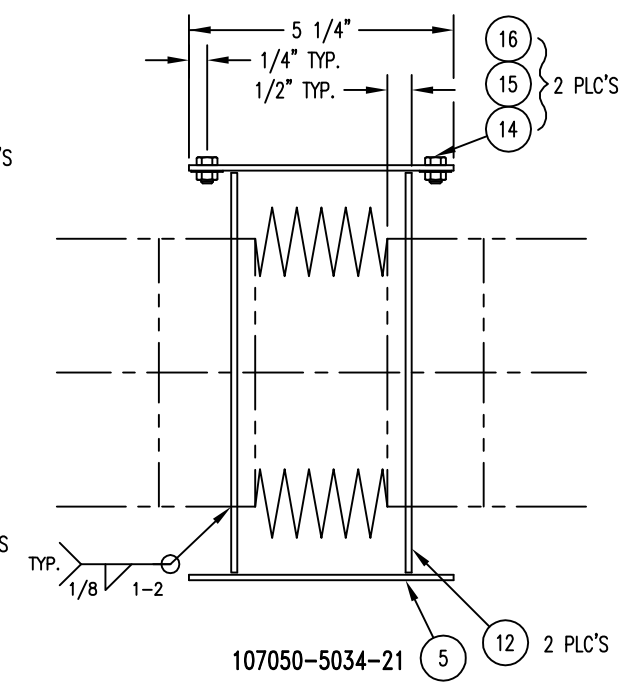

107050-5034-21

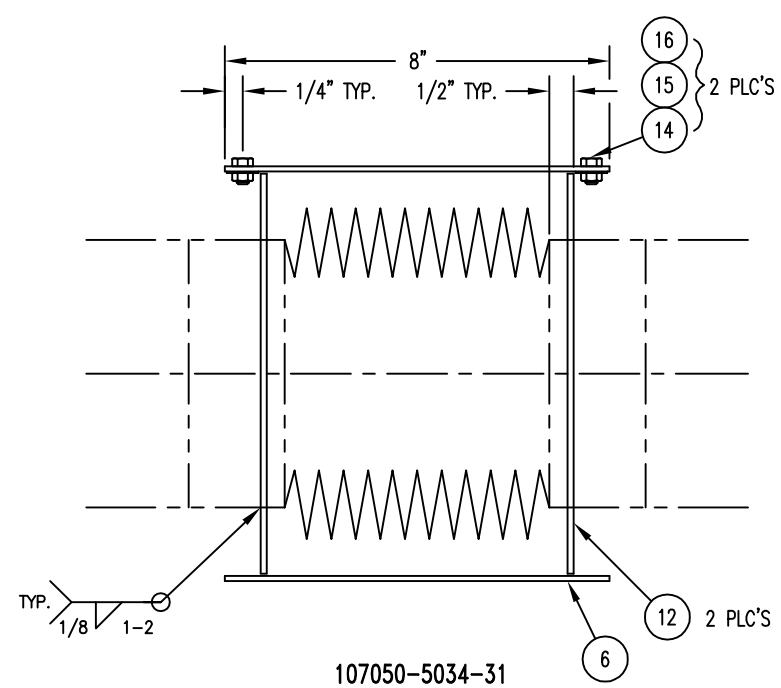

107050-5034-31

(A1) 2. WELD PER SPEC. 35-3010 ⟨22⟩ REV. M. WELDER TRACEABILITY REQ'D.

(A1) ⟨1⟩ MILL CERTS REQ'D PER SPEC. SK-5000, NOTE 3. MATERIAL TRACEABILITY REQ'D.

GENERAL NOTES:

BILL OF MATERIAL

-81	-71	-61	-51	-41	-31	-21	-11	-1	TOTAL NO. REQ'D	ADV. PROC.	DET. LOC.	AB NO.	ITEM	PART NUMBER	DWG. SIZE	DESCRIPTION	MATERIAL
													1				
								1	5				2	COM'L ⟨1⟩		PIPE,- 4" NPS, SCH. 5s x 4 3/4" LG.	SST ASTM A312 304L
							1		3				3	COM'L ⟨1⟩		PIPE,- 5" NPS, SCH. 5s x 4 7/8" LG.	SST ASTM A312 304L
			1						1				4	COM'L ⟨1⟩		PIPE,- 6" NPS, SCH. 5s x 4 1/8" LG.	SST ASTM A312 304L
						1			22				5	COM'L ⟨1⟩		PIPE,- 8" NPS, SCH. 5s x 5 1/4" LG.	SST ASTM A312 304L
					1				2				6	COM'L ⟨1⟩		PIPE,- 8" NPS, SCH. 5s x 8" LG.	SST ASTM A312 304L
				1					10				7	COM'L ⟨1⟩		PIPE,- 8" NPS, SCH. 5s x 13 1/2" LG.	SST ASTM A312 304L
		1							7				8	COM'L ⟨1⟩		PIPE,- 12" NPS, SCH. 5s x 4 3/4" LG.	SST ASTM A312 304L
								2	10				9	COM'L ⟨1⟩		RING,- 11GA. THK. x 2 13/32" ID. x 4 1/4" OD.	SST ASTM A240 304L
							2		6				10	COM'L ⟨1⟩		RING,- 11GA. THK. x 3 17/32" ID. x 5 1/4" OD.	SST ASTM A240 304L
			2						2				11	COM'L ⟨1⟩		RING,- 11GA. THK. x 4 17/32" ID. x 6 5/16" OD.	SST ASTM A240 304L
				2	2	2			68				12	COM'L ⟨1⟩		RING,- 11GA. THK. x 5 19/32" ID. x 8 5/16" OD.	SST ASTM A240 304L
2	2	2							38				13	COM'L ⟨1⟩		RING,- 11GA. THK. x 8 21/32" ID. x 12 1/4" OD.	SST ASTM A240 304L
2	2	2	2	2	2	2	2	2	124				14	COM'L		BOLT,- HEX HD. 1/4" - 20 UNC x 3/8" LG.	SST
2	2	2	2	2	2	2	2	2	124				15	COM'L		WASHER,- SPLIT LOCK 1/4" NOM.	SST
2	2	2	2	2	2	2	2	2	124				16	COM'L		NUT,- HEX 1/4" - 20 UNC.	SST
													17				
	1								1				18	COM'L ⟨1⟩		PIPE,- 12" NPS, SCH. 5s x 6" LG.	SST ASTM A312 304L
1									11				19	COM'L ⟨1⟩		PIPE,- 12" NPS, SCH. 5s x 9 3/4" LG.	SST ASTM A312 304L
													20				
													21				
11	1	7	1	10	2	22	3	5	TOTAL NO. REQUIRED								
				(A4)		(A3)		(A2)									

(A1)

	107050		107050-5034-41	6	107050-5013	B
	107050		107050-5034-21	1	107050-5013	B
	107050		107050-5034-81	11	107050-5012	B
	107050		107050-5034-71	1	107050-5012	B
	107050		107050-5034-61	7	107050-5012	B
	107050		107050-5034-21	1	107050-5012	B
	107050		107050-5034-1	1	107050-5012	B
	107050		107050-5034-51	1	107050-5011	B
	107050		107050-5034-41	4	107050-5011	B
	107050		107050-5034-31	2	107050-5011	B
	107050		107050-5034-21	20	107050-5011	B
	107050		107050-5034-11	3	107050-5011	B
	107050		107050-5034-1	4	107050-5011	B
	WEIGHT	WORK ORDER	CONTRACT NO.	PART NUMBER	NO. REQ'D	NEXT ASSEMBLY	SIZE

INFORMATION SHOWN ON THIS DRAWING IS PROPRIETARY AND THE SOLE PROPERTY OF AND IS NOT TO BE REPRODUCED, DISCLOSED OR TRANSMITTED TO OTHERS FOR ANY PURPOSE NOT AUTHORIZED BY.

DRAWN	AHH 11/08/99	TOLERANCES	
CHECKED		FRACTION	±1/16"
ENGINEER		.XX	±.010"
		.XXX	±.005"
APPROVED		ANGULAR	±1/2°
REVIEWED		CODE IDENT. NO.	
RELEASE DATE	11/19/99	19879	

LAST SECTION LETTER USED: --

AUTOCAD DWG. PLOT SCALE 1=4

[redacted]

TITLE: EXPANSION JOINT PROTECTIVE COVER ASSEMBLY & INSTALLATION

SIZE: B | DRAWING NO.: 107050-5034 | CHG.: A

SCALE NONE | SHEET 1 OF 2

A	A	REV	REV STATUS
2	1	SHEETS	OF SHEETS

107050-5034 SH. 1 (A)

107050-5034 SH. 1 (A)