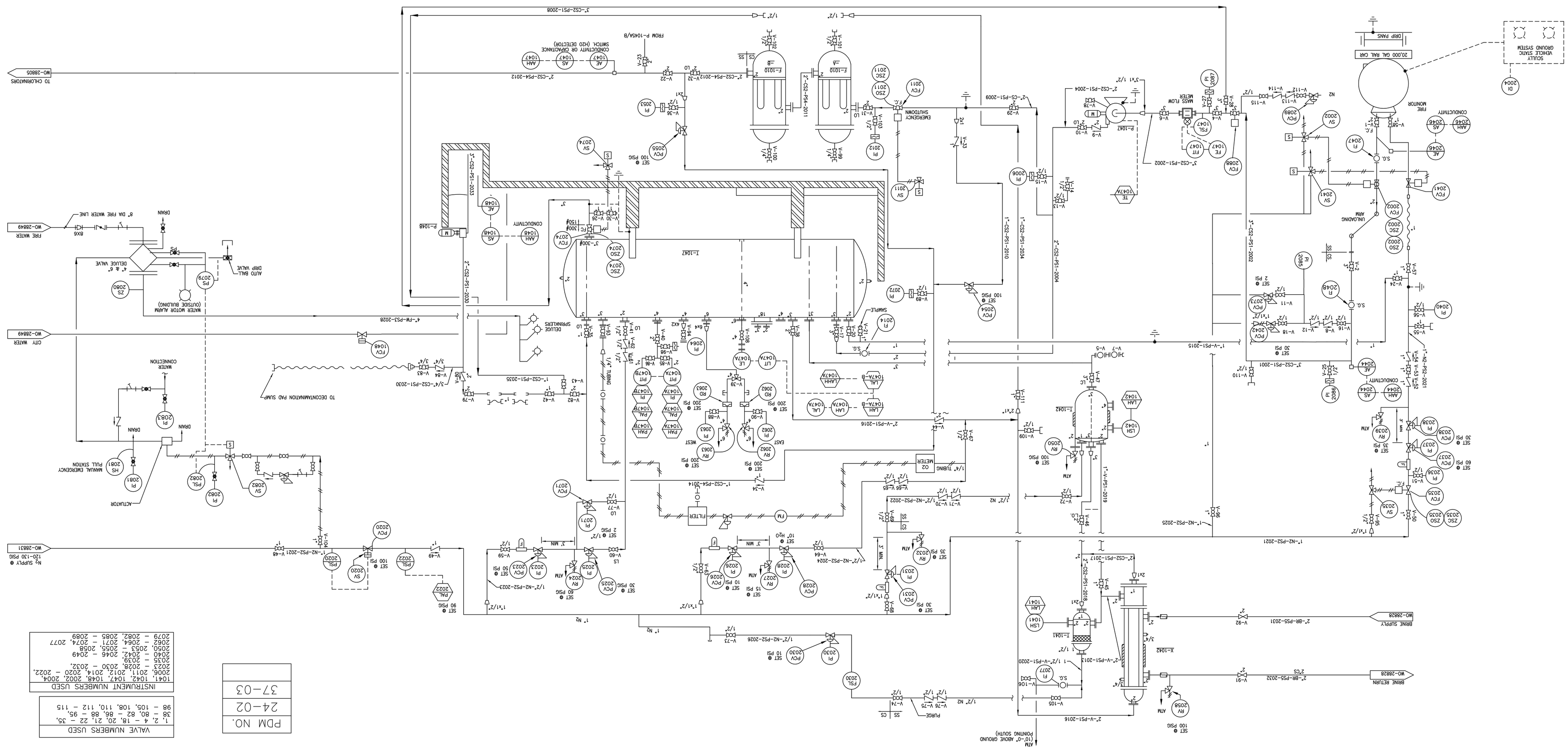
CARBON DISULFIDE UNLOADING, STORAGE, AND TRANSFER SYSTEM
W. O. 28966
D
C
DRAWING NUMBER
SIZE
REV.
TITLE
ORIGINAL ISSUE APPROVALS
SCALE
DATE
BY
SITE
BLDG.
CHARGE
PROJ.
APP.
THIS DRAWING IS NOT TO BE USED FOR CONSTRUCTION UNLESS SIGNED AND DATED APPROVED FOR CONSTR.
APPROVED FOR CONSTR.
STANDARDS AND SPECIFICATIONS
PROPRIETARY STATEMENT
REFERENCE DRAWINGS
REVISION
NO. DATE BY APP. APP. AFC PROJECT
PDM NO.
24-02
37-03
VALVE NUMBERS USED
1, 2, 4 – 18, 20, 21, 22 – 35, 36 – 80, 82 – 86, 88 – 95, 98 – 105, 108, 110, 112 – 115
INSTRUMENT NUMBERS USED
1041, 1042, 1047, 1048, 2002, 2004, 2006, 2011, 2012, 2014, 2020 – 2022, 2023 – 2028, 2030 – 2032, 2035 – 2039, 2040 – 2042, 2046 – 2049, 2050, 2053 – 2055, 2058, 2062 – 2064, 2071 – 2074, 2077, 2079 – 2082, 2085 – 2089
SCULLY VEHICLE STATIC GROUND SYSTEM
20,000 GAL RAIL CAR
DIKE PANS
CONDUCTIVITY
FIRE MONITOR
UNLOADING ARM
EMERGENCY SHUTDOWN
MASS FLOW METER
TO CHLORINATORS
TO DECONTAMINATION PAD SUMP
WATER MOTOR ALARM (OUTSIDE BUILDING)
AUTO BALL DRIP VALVE
DELUGE VALVE
FIRE WATER
CITY WATER
WATER CONNECTION
DRAIN
ACTUATOR
MANUAL EMERGENCY PULL STATION
DELUGE SPRINKLERS
FILTER
TUBING
SAMPLE
EAST
WEST
BRINE SUPPLY
BRINE RETURN
ATM (10'-0" ABOVE GROUND POINTING SOUTH)
N2 SUPPLY 120-130 PSIG