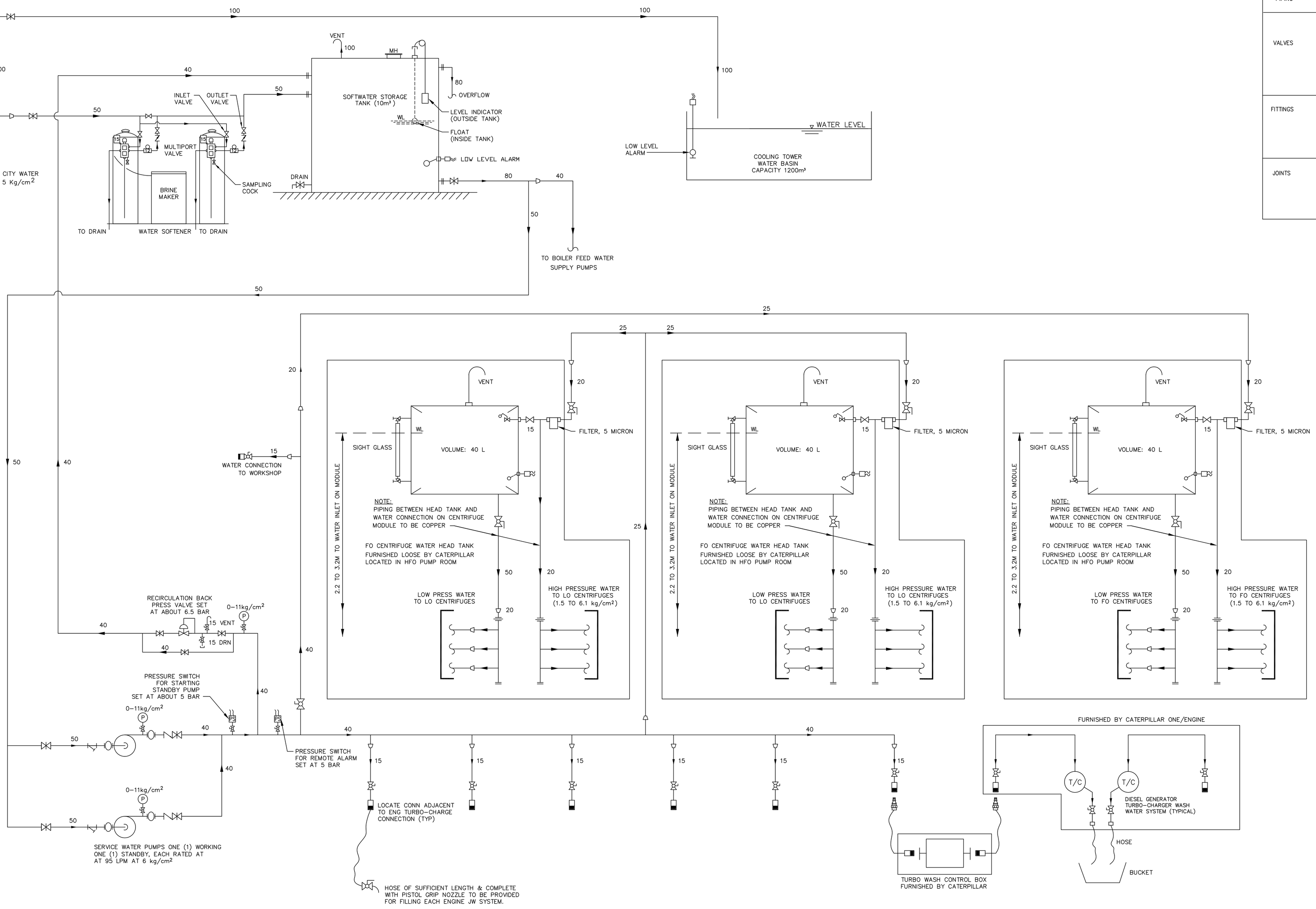

PIPING MATERIAL SPECIFICATIONS

TYPE	SIZE	MATERIAL SPECIFICATIONS
PIPING	ALL	SEAMLESS BLACK STEEL, SCH 40, GALVANIZED, ASTM A106, GRADE B
VALVES	ALL	200#, BRONZE, SCREWED, UNION BONNET, ASTM B61 OR B62 –OR– BALL VALVES, THREE PIECE, BRZ, 600#, NON–SHOCK WOG, LEVER OPERATED, THRD, ASTM B584
FITTINGS	65 AND ABOVE	FORGED STEEL, STD WT, BUTT WELD, GALVANIZED, ASTM A234
	50 AND BELOW	MALLEABLE IRON, 300#, SCREWED, GALVANIZED, ASTM A197
JOINTS	65 AND ABOVE	SLIP–ON–WELD FLANGE, 150#, GALVANIZED, FORGED STEEL, ASTM A105
	50 AND BELOW	MALLEABLE IRON, 300#, UNIONS, GALVANIZED, SCREWED, ASTM A197

GENERAL NOTES

1. AFTER FABRICATION & TESTING, ALL PIPES SHALL BE FLUSHED AND BLOWN–OUT TO ENSURE ALL DEBRIS AND FOREIGN MATERIAL IS REMOVED. ALL OPENINGS TO BE PLUGGED AFTER CLEANING TO KEEP FOREIGN MATERIALS OUT OF PIPE ASSEMBLIES.
2. PIPE HANGERS SHALL BE U–BOLT TYPE, BOLTED TO ANGLE SUPPORTS.
3. THE WATER QUALITY TO THE FO & LO CENTRIFUGES MUST MEET THE FOLLOWING CRITERIA:
   - TOTAL HARDNESS MAX. 180PPM $CaCO_3$
   - PH VALUE > 6
   - SALINITY: MAX CHLORIDE CONTENT OF 60PPM CL (EQUIVALENT TO 100PPM NaCL)
4. THE PIPE SIZES SHOWN ARE FOR GUIDANCE ONLY. FINAL PIPE SIZES MUST BE BASED ON ACTUAL LAY–OUT OF PIPING, DISTANCES BETWEEN TANKS, CENTRIFUGE MODULES, EQUIPMENT, RUNS OF PIPING, NUMBER OF FITTINGS, ETC. BY THE CONTRACTOR.
5. PROVIDE HIGH POINT VENTS AND LOW POINT DRAINS TO FACILITATE FILLING AND DRAINING OF PIPING SYSTEMS.
6. ALL PIPING SUBJECT TO VIBRATION SHALL BE FITTED WITH APPROPRIATE FLEXIBLE CONNECTIONS.